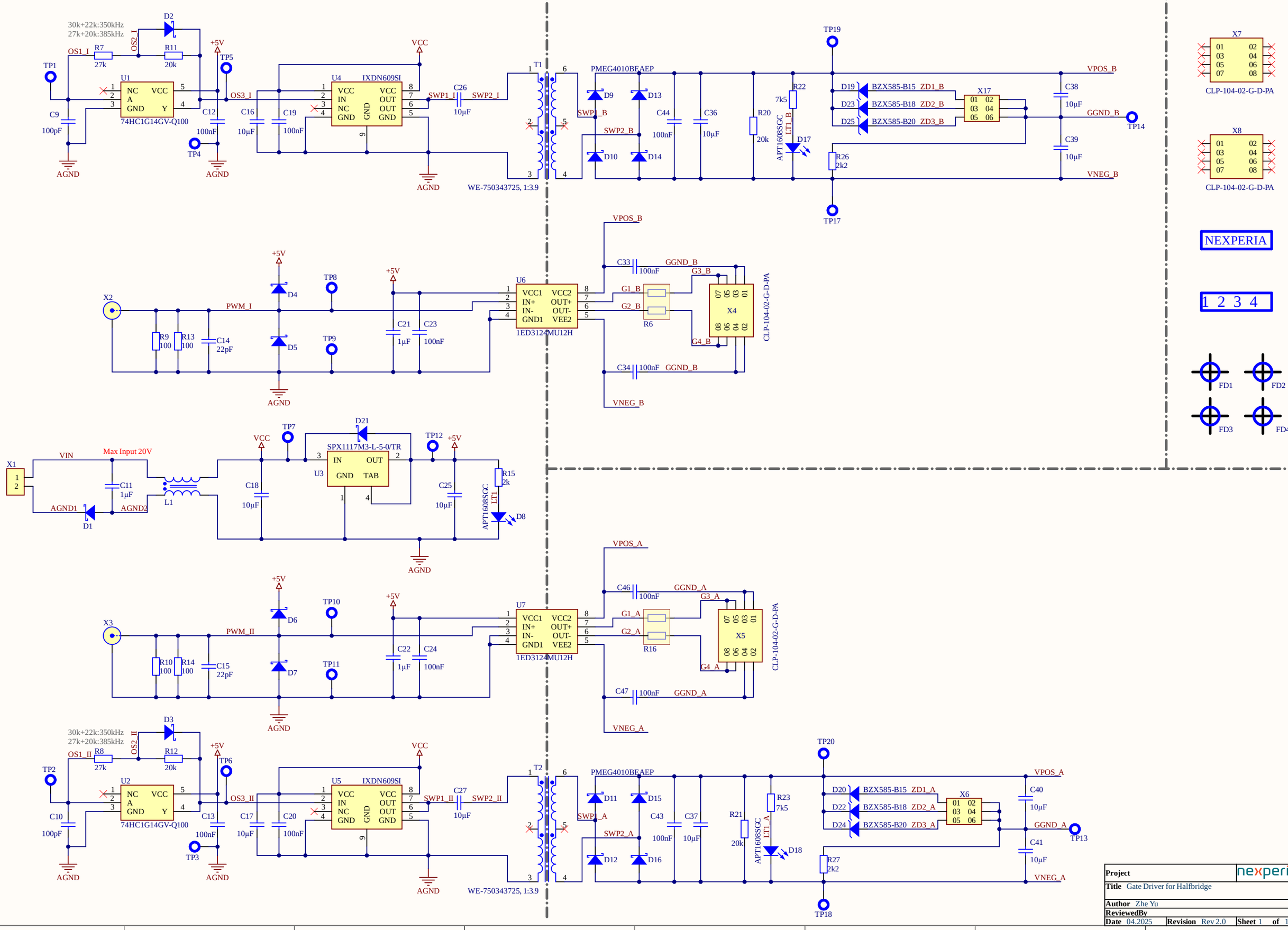

Project	nexperia
Title	Gate Driver for Halfbridge
Author	Zhe Yu
ReviewedBy	
Date	04.2025
Revision	Rev 2.0
Sheet	1 of 1